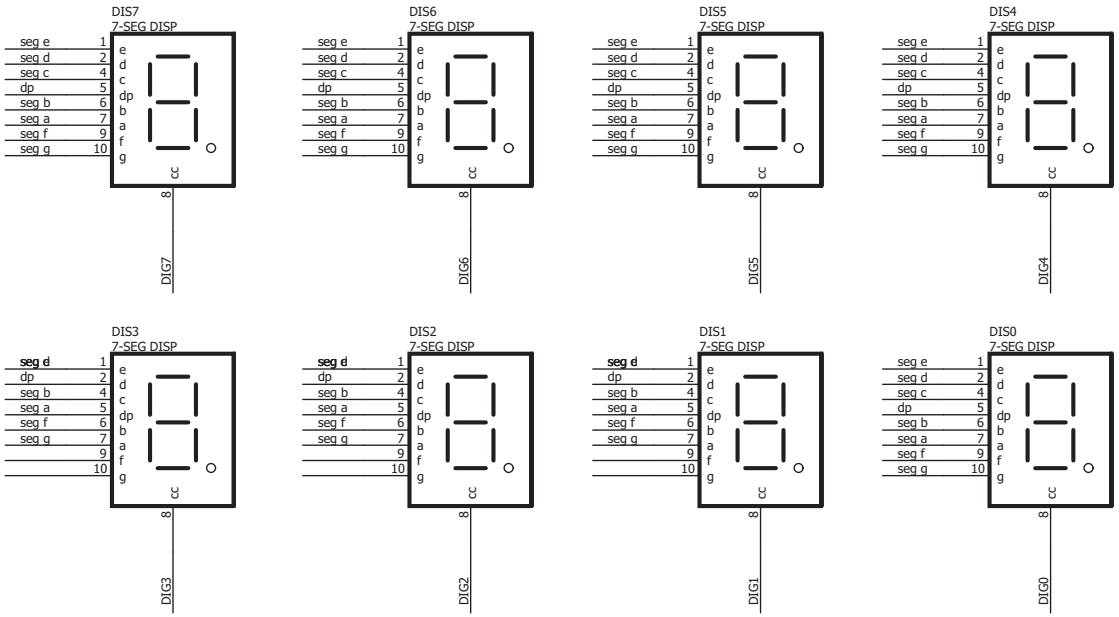

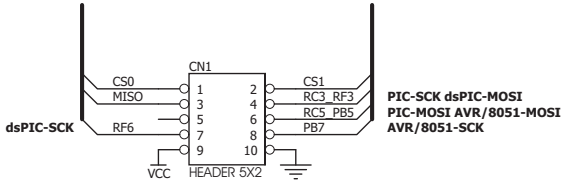

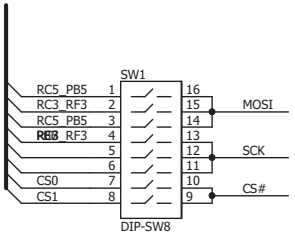

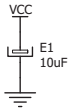

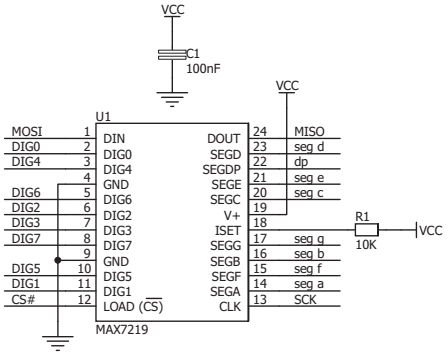

mikroElektronika
DEVELOPMENT TOOLS - COMPILERS - BOOKS
WEB: www.mikroe.com
FORUM: www.mikroe.com/forum

Serial 7-seg Display 2 Schematic v100

MikroElektronika Development systems