mikroElektronika
DEVELOPMENT TOOLS - COMPILERS - BOOKS
WEB: www.mikroe.com
FORUM: www.mikroe.com/forum

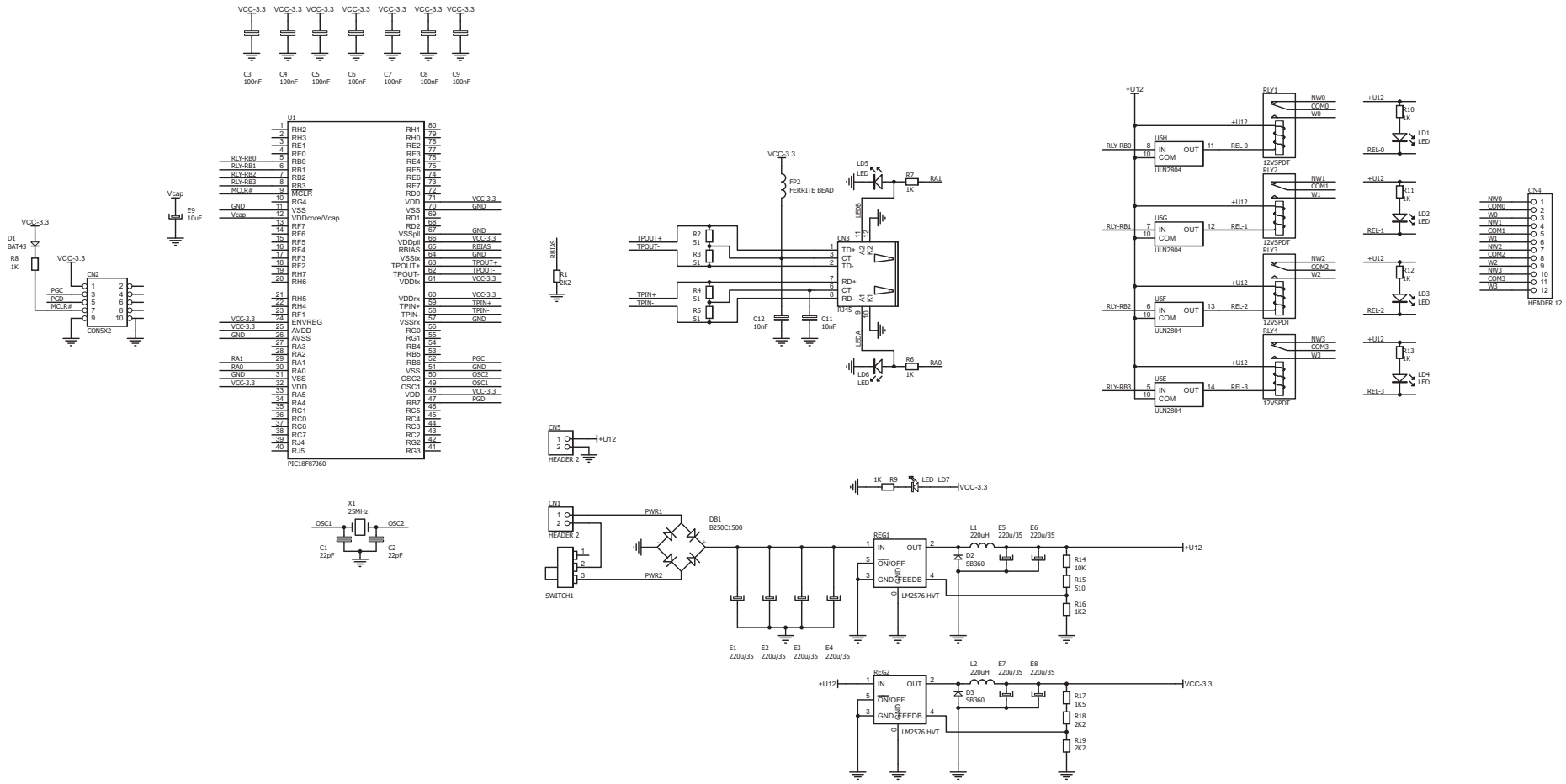

PIC-PLC4 Schematic v100

MikroElektronika Development systems