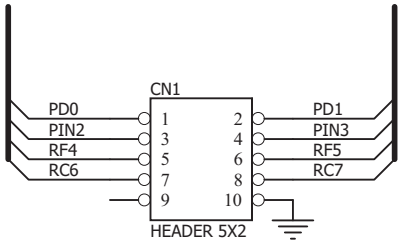

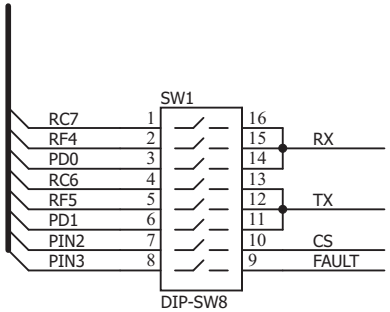

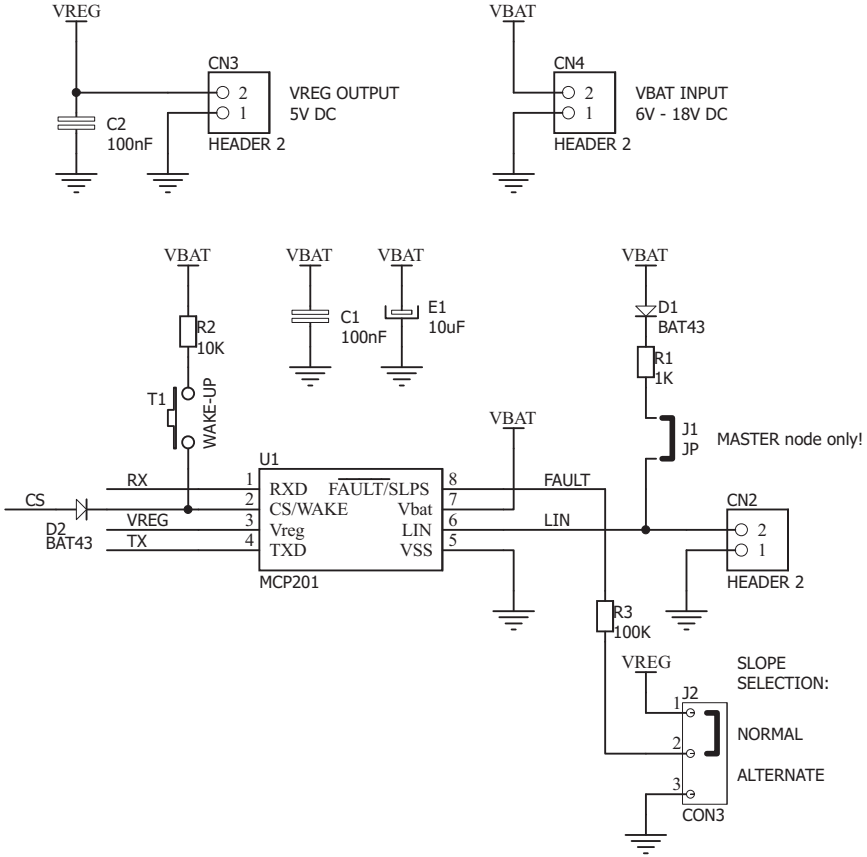

LIN Schematic v100

MikroElektronika Development systems