mikroElektronika
DEVELOPMENT TOOLS - COMPILERS - BOOKS
WEB: www.mikroe.com
FORUM: www.mikroe.com/forum

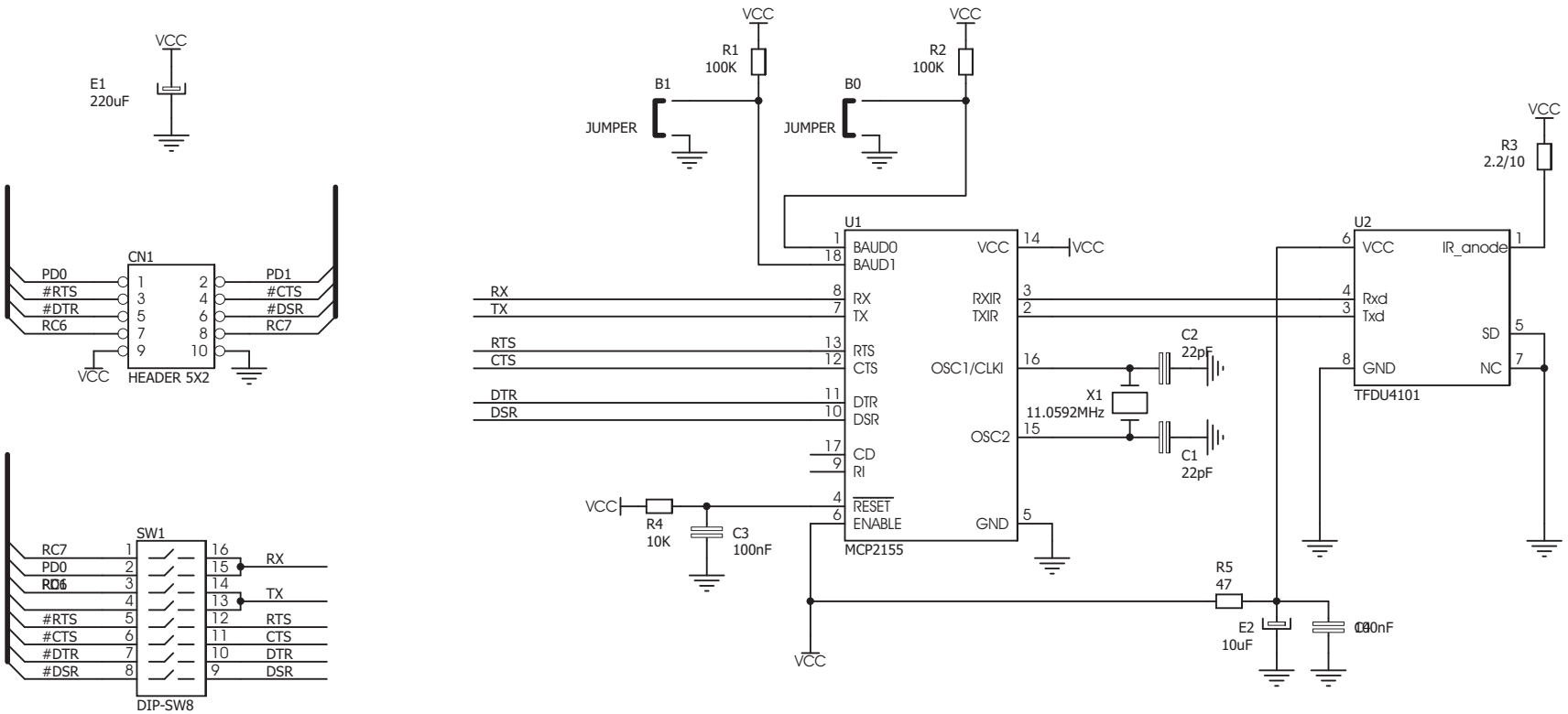

IrDA1 Schematic v110

Page 1/1

MikroElektronika Development systems