mikroElektronika
DEVELOPMENT TOOLS - COMPILERS - BOOKS
WEB: www.mikroe.com
FORUM: www.mikroe.com/forum

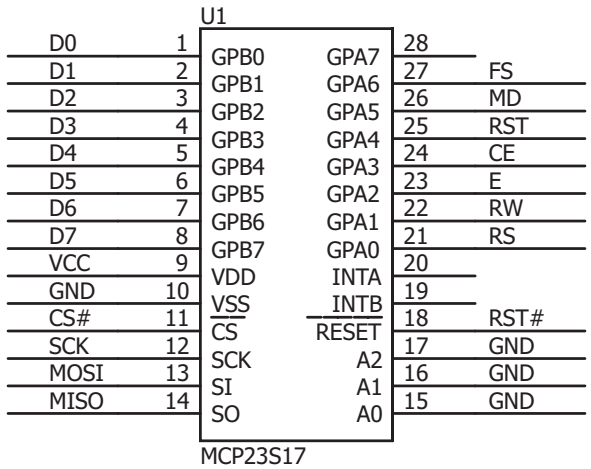

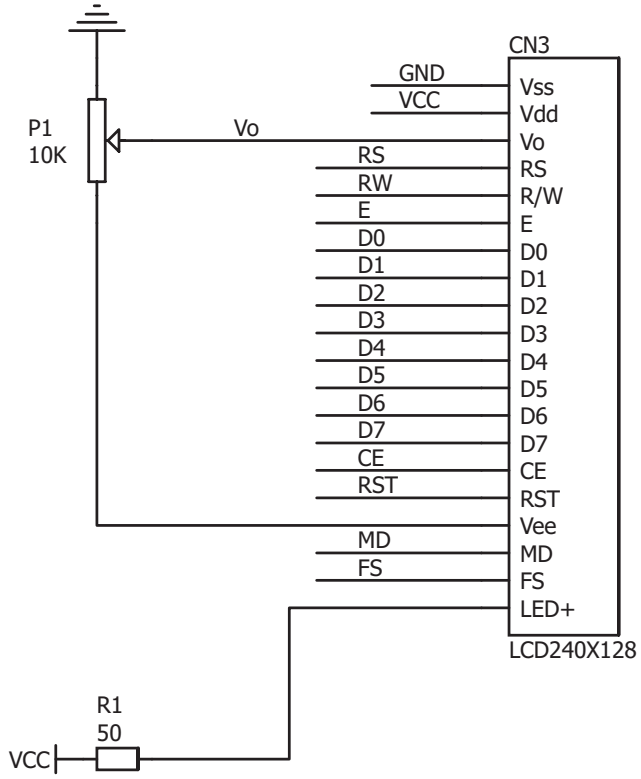

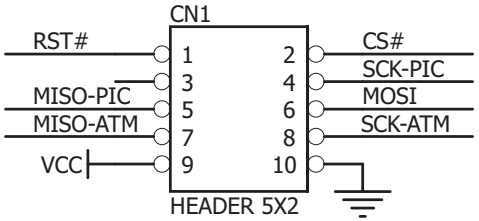

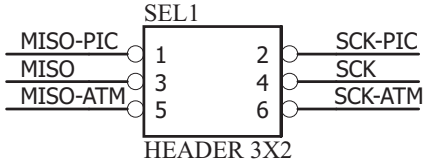

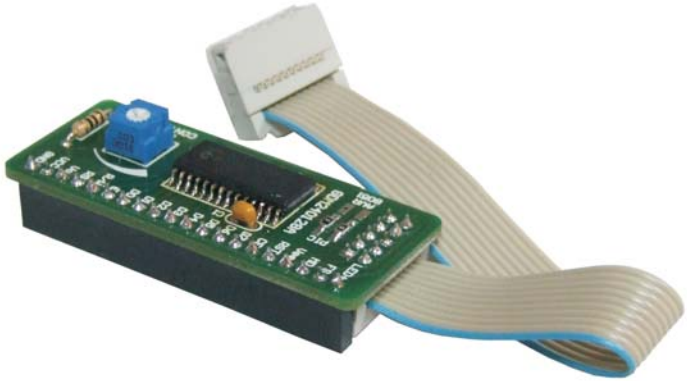

Serial GLCD Adapter: GDM240128A.

MikroElektronika Development systems