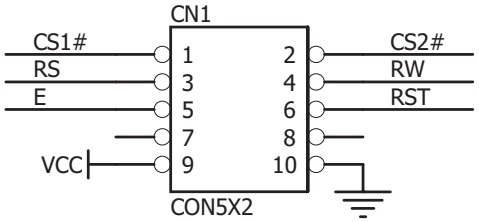

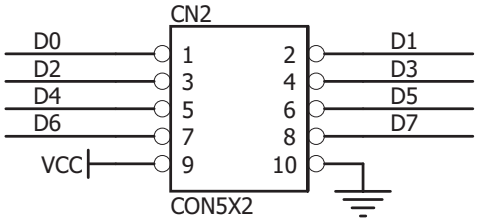

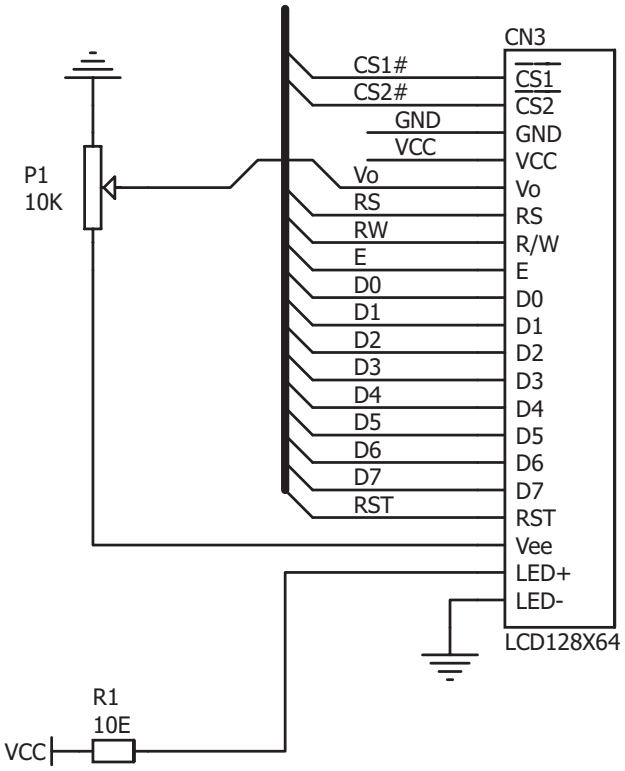

GLCD Adapter: GDM12864B.

MikroElektronika Development systems