mikroElektronika
DEVELOPMENT TOOLS - COMPILERS - BOOKS
WEB: www.mikroe.com
FORUM: www.mikroe.com/forum

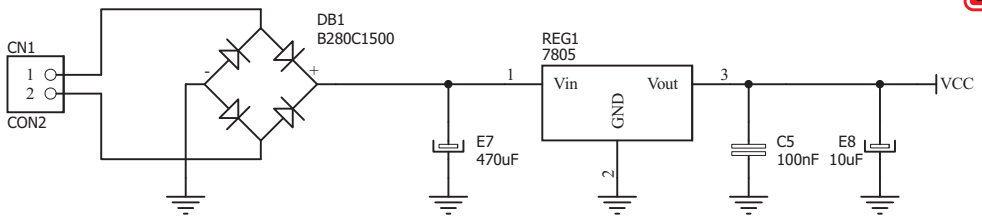

RS-232 COMM. CONNECTOR

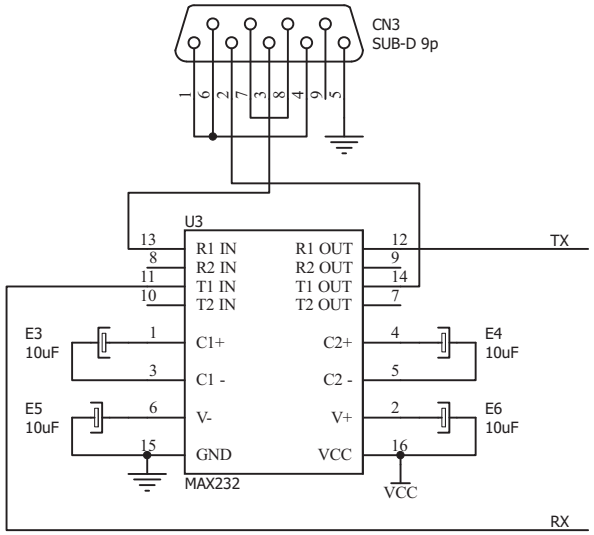

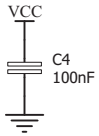

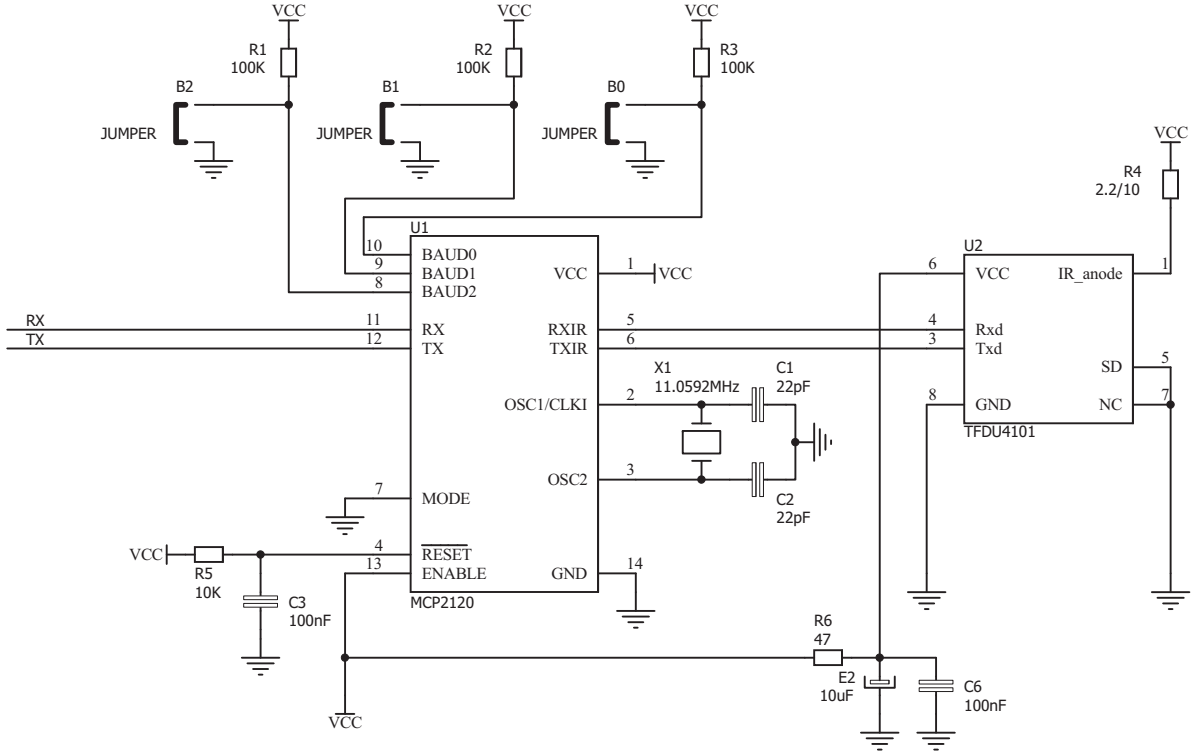

IrDA2PC Schematic v102

MikroElektronika Development systems