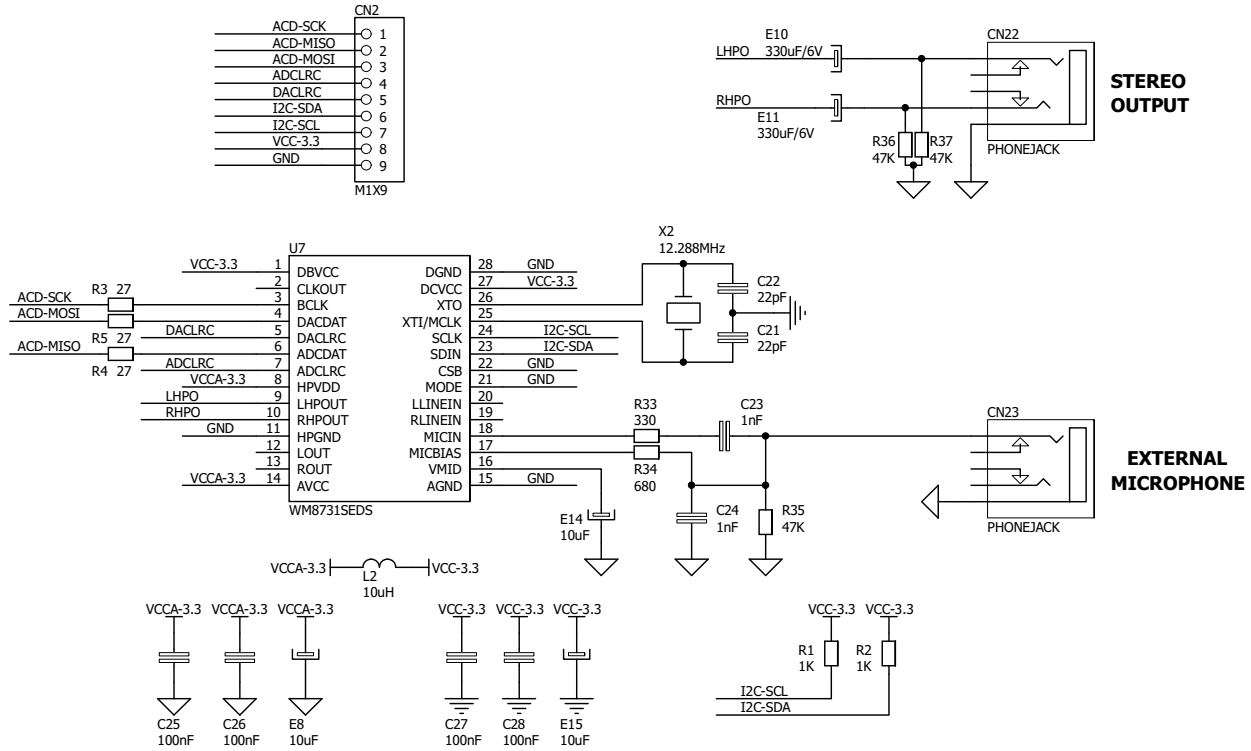

Audio Codec Board - PROTO Schematic v101

MikroElektronika Development systems